TOYOTA

AUDIO COMPONENT SERVICE MANUAL

CASSETTE TAPE PLAYER

VEHICLE	DESTINATION	PRODUCED AFTER	TOYOTA PART No.	FUJITSU TEN MODEL No.
CELICA	CANADA	AUGUST 1981	86260-14270	SP-1102
COROLLA	NORTH AMERICA EUROPE AUSTRALIA			
TERCEL	NORTH AMERICA	AUGUST 1982		

GENERAL

This manual is published as the following points are modified.

	BEFORE MODIFICATION	AFTER MODIFICATION
PC BOARD	RN-MPC-1156B RN-MPC-1223 RN-MPM-2133 RN-MPM-999	RN-MPC-1284 RN-MPC-1223A RN-MPM-2133A ———
CASSETTE DECK	RN-MDK-45/3	RN-MDK-45/3A

Manufactured for TOYOTA

by *FUJITSU TEN LIMITED*

PUB. NO. **SM-417A**

SPECIFICATIONS

NUMBER OF TRACKS 4-track 2-channels
TAPE CARTRIDGE ..... Stereo/Monaural compact cassette
TAPE SPEED ..... 4.76 cm/sec. $\left(\begin{smallmatrix}+3\\-2\end{smallmatrix}\%\right)$
WOW & FLUTTER ..... 0.2% or less (WRMS)
CROSSTALK ..... 40 dB or better (at 1 kHz)
SEPARATION ..... 30 dB or better (at 1 kHz)
FREQUENCY RESPONSE ..... 125 Hz ..... $\begin{smallmatrix}+3\\-8\end{smallmatrix}$ dB
8 kHz ..... $\begin{smallmatrix}+3\\-8\end{smallmatrix}$ dB
SIGNAL TO NOISE RATIO ..... 45 dB or better
LOAD IMPEDANCE ..... 4 ohm
OUTPUT POWER ..... 10 watts × 2
SEMICONDUCTORS ..... 6 ICs, 4 Transistors, 8 Diodes, 2 LEDs
POWER INPUT ..... 12-volt car battery, negative terminal to ground
Voltage ..... 13.2 VDC
Current ..... Approx. 1.5A (at 0.5 watt output)
Approx. 5A (at program change)
TAKE-UP TORQUE ..... 45 to 65 g-cm
DIMENSIONS ..... 180(W) × 50(H) × 130(D)mm
(7-3/32", 1-31/32", 5-7/64")
WEIGHT ..... 1.2 kg (2.7 lbs)

HOOK-UP

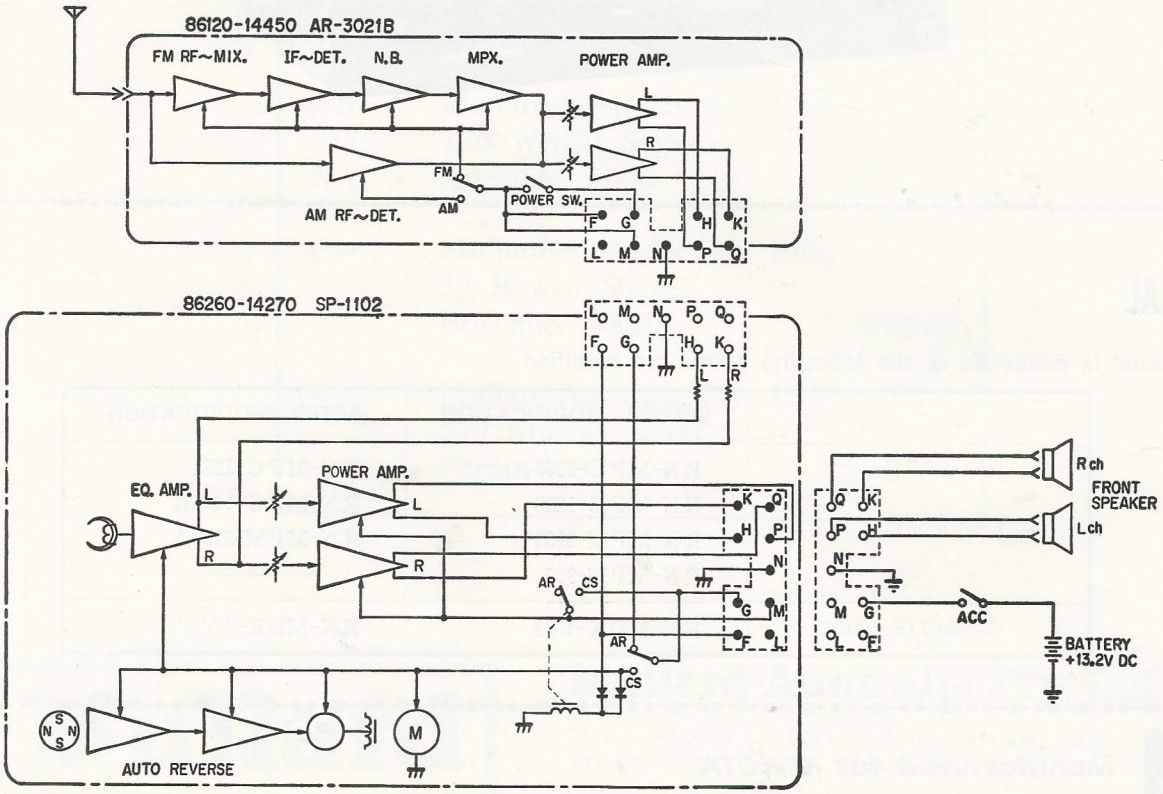

Fig. 1 (C32271102)

COMBINATION

〔SP-1102A〕

〔CELICA〕

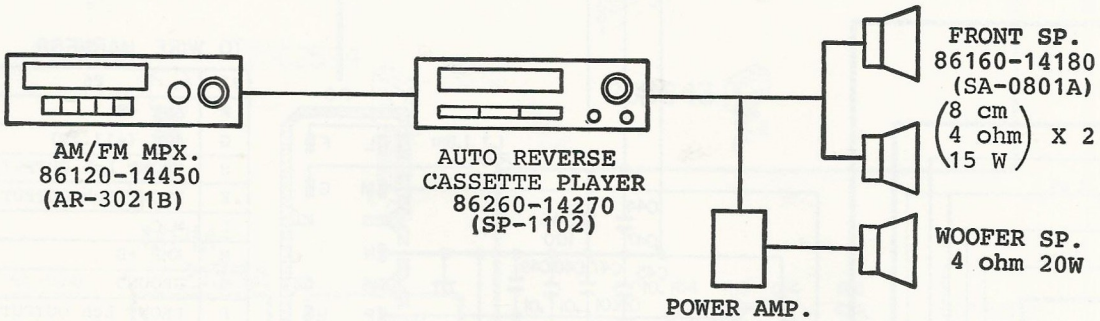

〔COROLLA〕

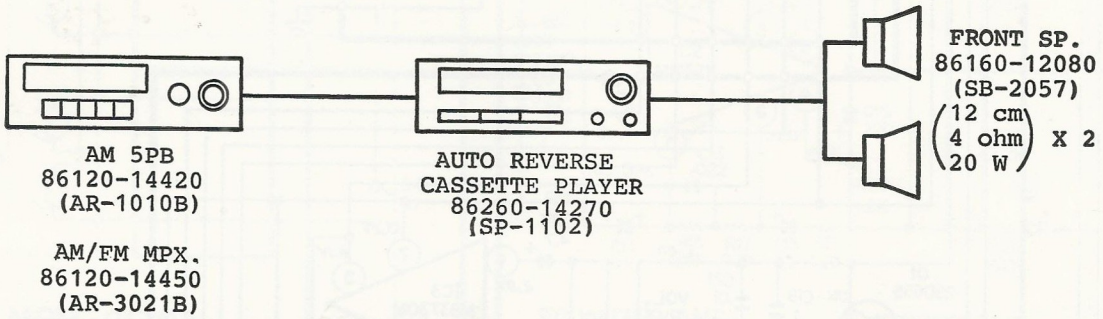

Fig. 2 (C32271102)

CONNECTIONS (REAR VIEW)

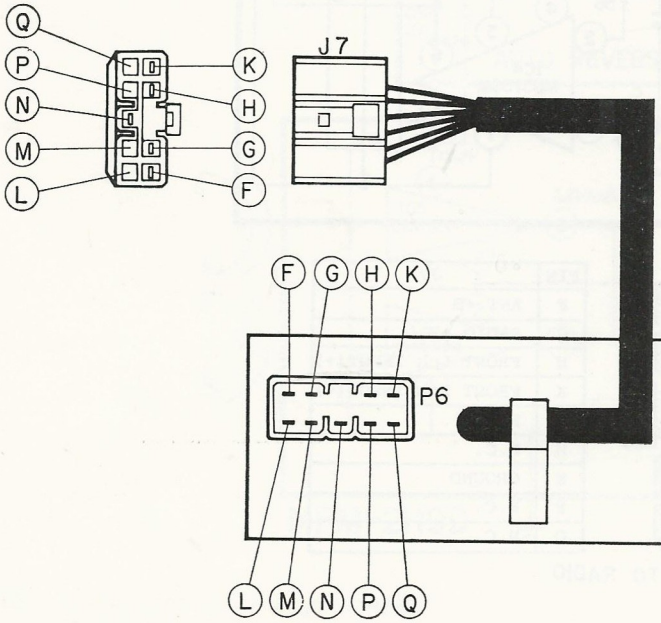

(Pin view)

PIN	P6	J7
F	ANT +B	ANT +B
G	ACC (+13.2V)	RADIO +B
H	FRONT Lch OUTPUT(+)	FRONT Lch INPUT(+)
K	FRONT Rch OUTPUT(+)	FRONT Rch INPUT(+)
L	N.C.	N.C.
M	AMP +B	N.C.
N	GROUND	GROUND
P	FRONT Lch OUTPUT(-)	N.C.
Q	FRONT Rch OUTPUT(-)	N.C.

Fig. 3 (C23271100)

ADJUSTMENT FOR TAKE-UP TORQUE

1. Measure the take-up torque by inserting the torque gauge cartridge into the slip mechanism.
2. The torque should be always between 45 and 65g-cm.
   The roller has four positions for the spring to be set.
3. Set the spring in one of ①-④ positions for the sufficient value. The take-up torque may vary 10g-cm per one step of the roller.

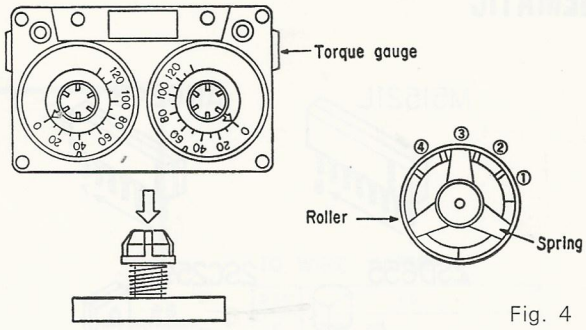

Fig. 4

PLAYBACK HEAD ADJUSTMENT (Azimuth)

1. Carefully adjust the azimuth adjust screw for maximum volume and treble tone without using test instrument.
2. If test tape is not available, use a stereo tape with some high treble tones and follow the same procedure as outlined above.

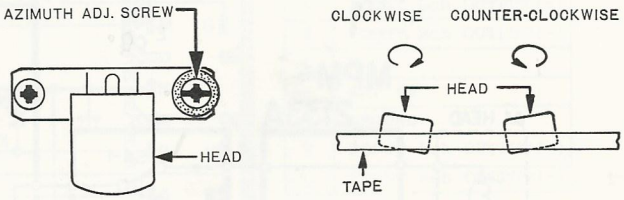

Fig. 5

EXCHANGE OF BELT

1. Remove holder by unscrewing screws [1] 2.6×3mm in the lower part of cassette deck and removing spring [2].
2. Remove screw [3] 2.6×3mm, spring [2] and holder to exchange belt.

EXCHANGE OF MOTOR

Unscrew screws [4] 2.6×3mm to exchange motor.

EXCHANGE OF SLIP MECHANISM

Remove E-type ring and washer [5] to exchange slip mechanism.

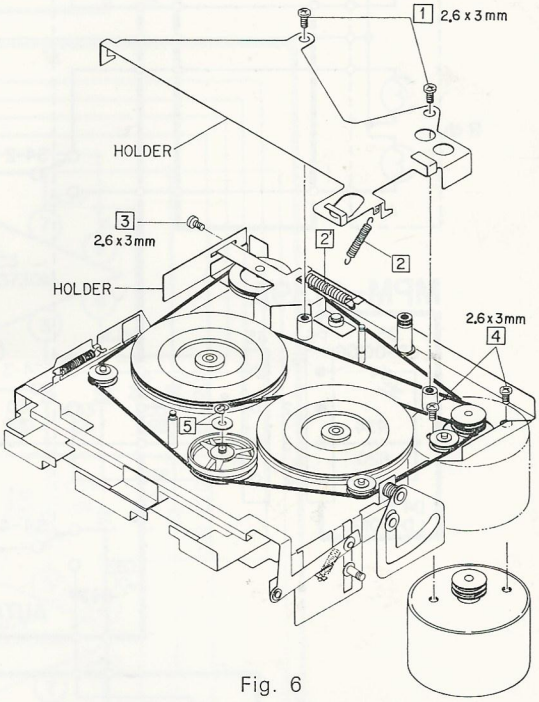

Fig. 6

EXCHANGE OF HEAD

1. Unscrew screws [6] 3×4mm and remove PC board.
2. Unscrew azimuth adjustment screw [7] 2×6mm and [8] 2×3mm and unsolder at flexible board to exchange head.

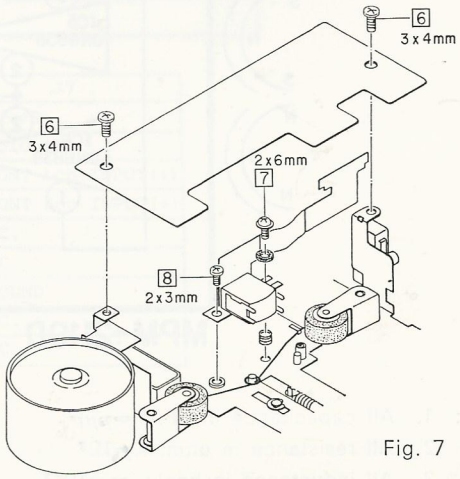

Fig. 7

SCHEMATIC

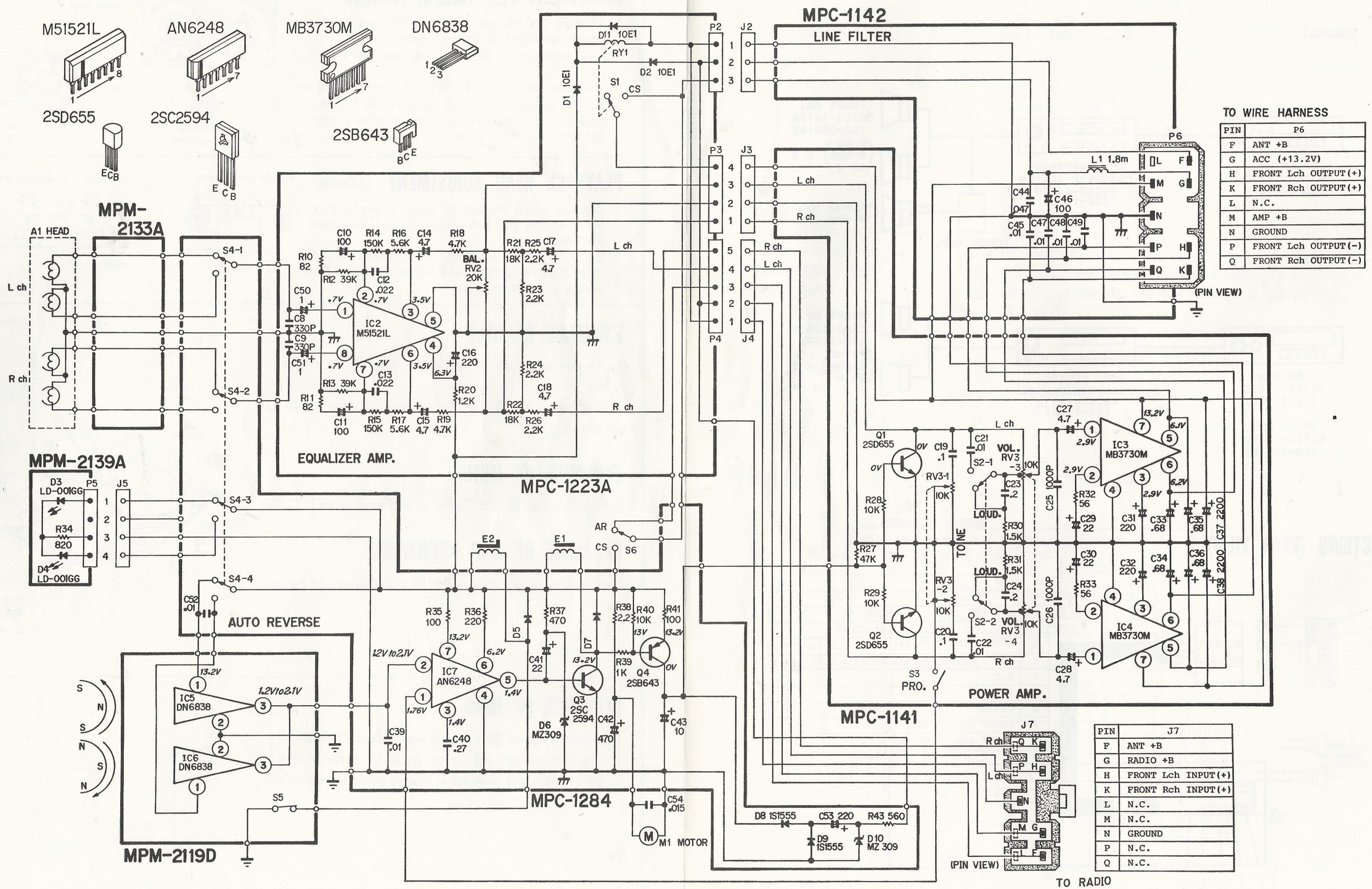

TO WIRE HARNESS

PIN	P6
F	ANT +B
G	ACC (+13.2V)
H	FRONT Lch OUTPUT(+)
K	FRONT Rch OUTPUT(+)
L	N.C.
M	AMP +B
N	GROUND
P	FRONT Lch OUTPUT(-)
Q	FRONT Rch OUTPUT(-)

PIN	J7
F	ANT +B
G	RADIO +B
H	FRONT Lch INPUT(+)
K	FRONT Rch INPUT(+)
L	N.C.
M	N.C.
N	GROUND
P	N.C.
Q	N.C.

NOTES: 1. All capacitance in μF, P=$\mu\mu$F
2. All resistance in ohm, K=10^3
3. All inductance in henly, m=10^{-3}, μ=10^{-6}

Fig. 8 (C24271102)

4. DC voltage against the chassis measured with 100k ohm/volt meter, power supply set at +13.2 VDC, no signal input.

WIRING ON PC BOARDS

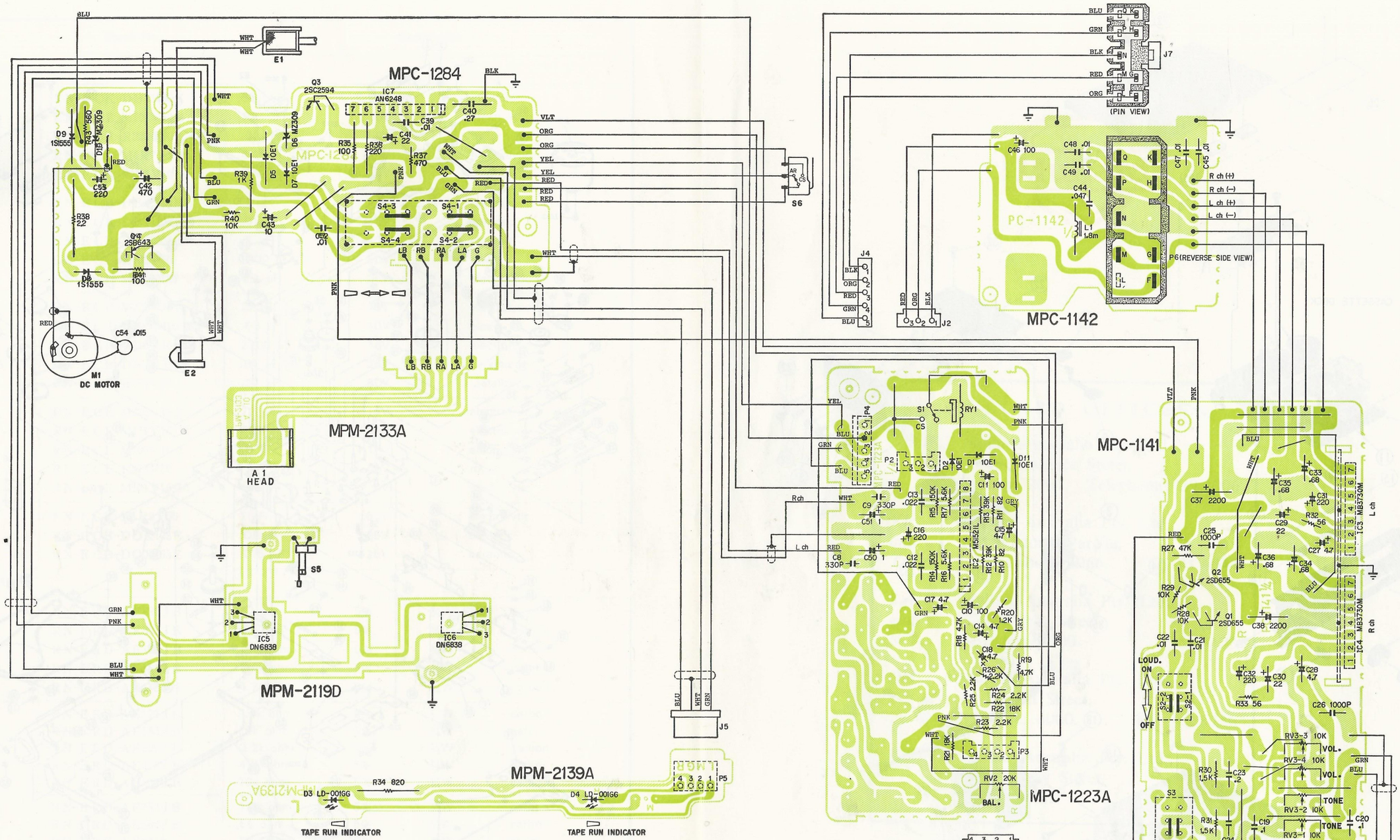

Fig. 9 (C27271102)

IC No. \ Pin No.	1	2	3	4	5	6	7	8
IC 2	.7	.7	3.5	6.3	0	3.5	.7	.7
IC 3, 4	2.9	2.9	2.9	0	6.1	6.2	13.2	/
IC 5, 6	13.2	0	2.1	/	/	/	/	/
IC 7	1.8	1.8	1.4	0	1.4	6.2	13.2	/

(Unit : V)

Tr. No. \ Pin No.	E	C	B
Q 1, 2	0	0	0
Q 3	0	13.2	1.4
Q 4	13.2	0	13.2

〔NOTE〕 PC Board RN-MPM-2133A : Parts side view

EXPLODED VIEW

〔SP-1102A〕

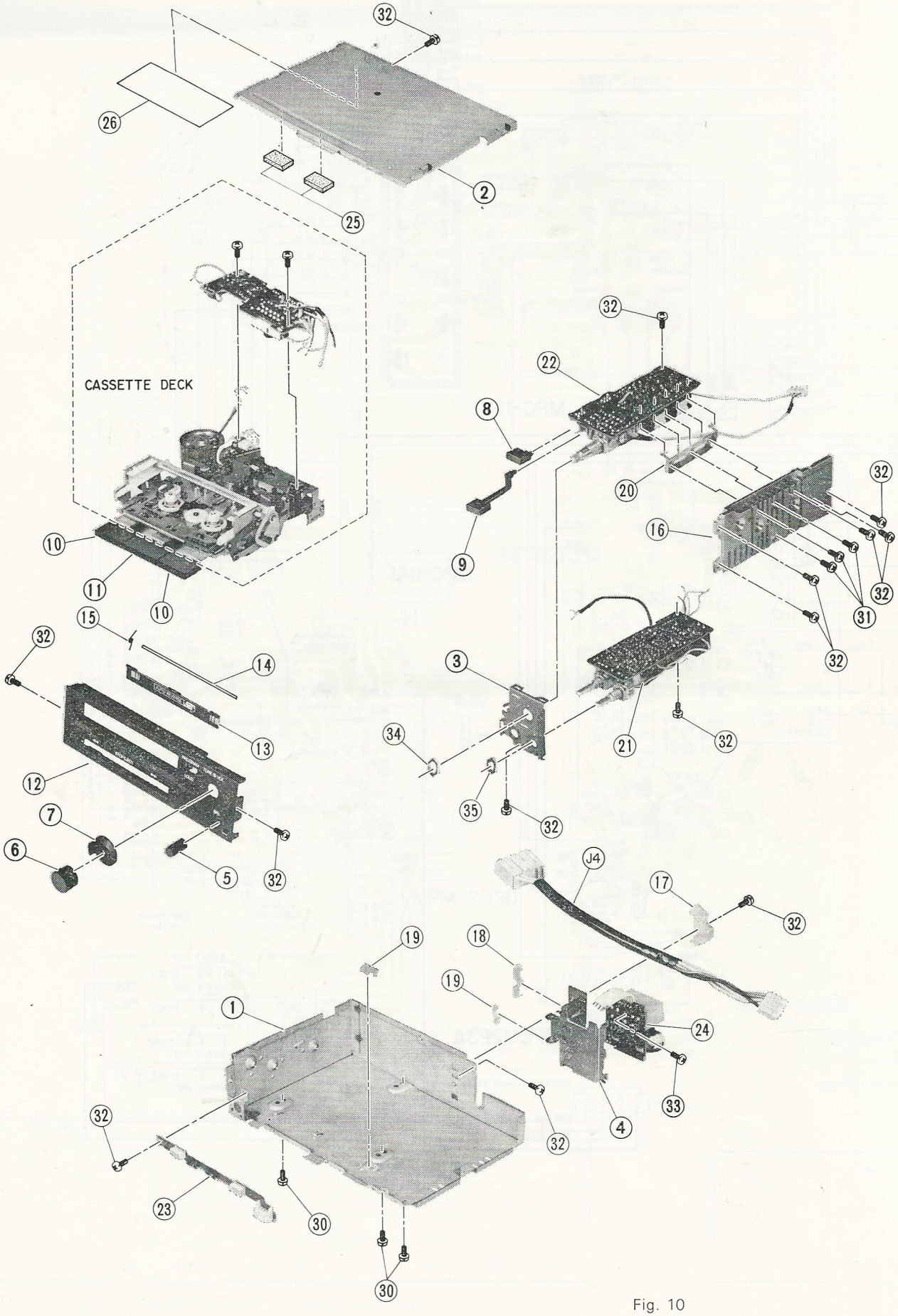

Fig. 10

EXPLODED VIEW (CASSETTE DECK) MDK-45/3A

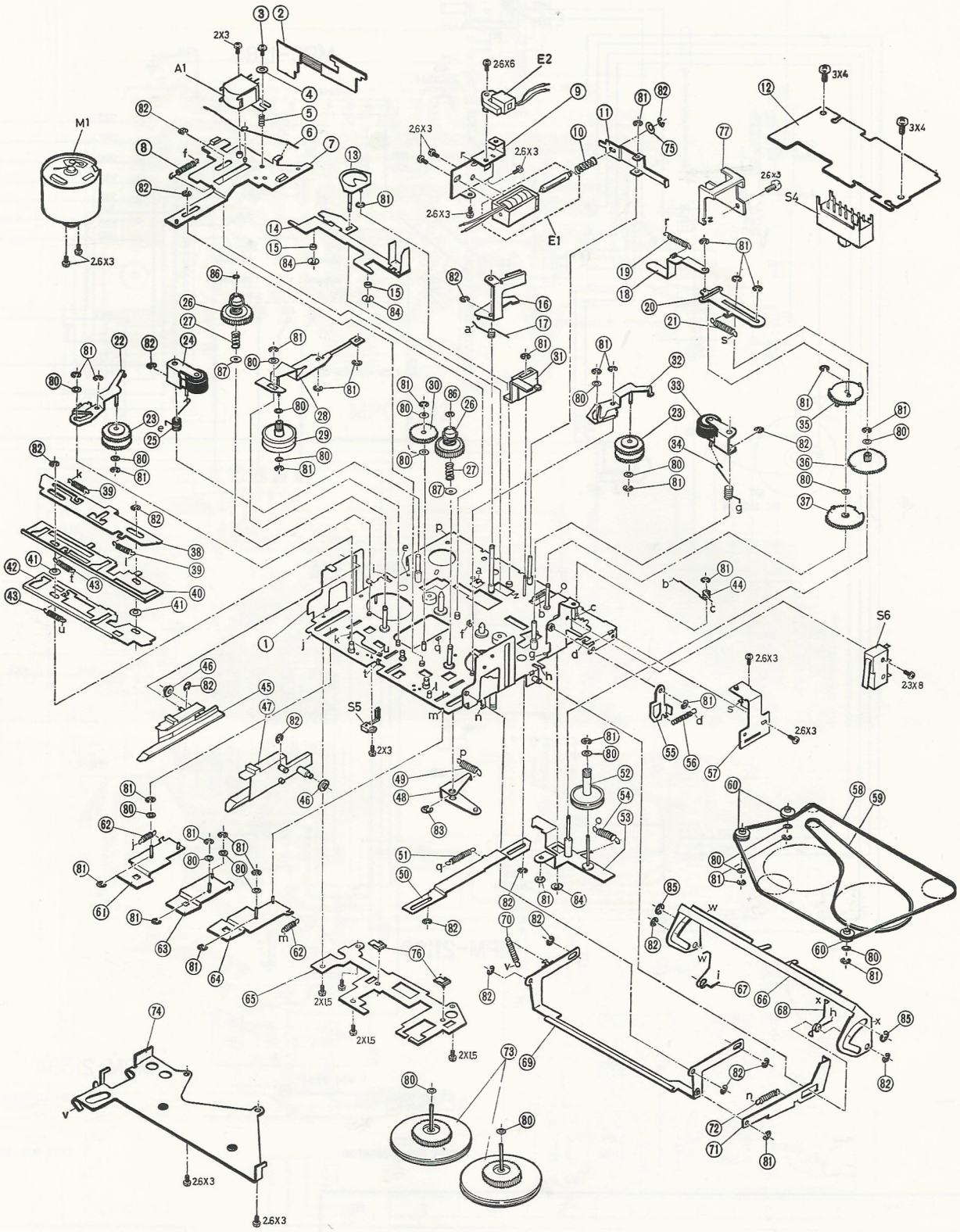

Fig. 11 (C28271101)

REPLACEMENT PARTS LIST

Symbol No.	Stock No.	Description			
CAPACITORS					
C 8, 9	RN-ECK-DB331KY	330 pF	50V		ceramic
C10, 11	RN-ECE-M101V10-6	100 μF	10V		electrolytic
C12, 13	RN-ECF-R223V50	.022 μF	50V		mylar
C14—18, 27	RN-ECE-M4R7V35-2	4.7 μF	35V		electrolytic
C16, 31, 32, 53	RN-ECE-M221V10-9	220 μF	10V		electrolytic
C19, 20	RN-ECB-DBC104B	.1 μF	12V		ceramic
C21, 22	RN-ECB-DBC103E	.01 μF	25V		ceramic
C23, 24	RN-ECB-DBC204B	.2 μF	12V		ceramic
C25, 26	RN-ECF-R102V50	1000 pF	50V		mylar
C28	RN-ECE-M4R7V25	4.7 μF	25V		electrolytic
C29, 30	RN-ECE-M220V16-1	22 μF	16V		electrolytic
C33—36	RN-ECJ-MR68M10-09F	.68 μF	10V		alox
C37, 38	RN-ECE-M222V16-4	2200 μF	16V		electrolytic
C39, 45, 47—49	RN-ECB-DSR103E	.01 μF	25V		ceramic
C40	RN-ECH-R274V50	.27 μF	50V		metalized paper
C41	RN-ECE-M220V16-2	22 μF	16V		electrolytic
C42	RN-ECE-M471V16-13	470 μF	16V		electrolytic
C43	RN-ECE-M100V16-8	10 μF	16V		electrolytic
C44	RN-ECF-R473V50	.047 μF	50V		mylar
C46	RN-ECE-M101V16-10	100 μF	16V		electrolytic
C50, 51	RN-ECE-M1R0V50	1 μF	50V		electrolytic
C52	RN-ECB-DOX103E	.01 μF	25V		ceramic
C54	RN-ECB-DOX153E	.015 μF	25V		ceramic
RESISTORS					
R10, 11	RN-ERD-AE820JB	82 ohm	5%	¼W	carbon
R12, 13	RN-ERD-AE393JB	39k ohm	5%	¼W	carbon
R14, 15	RN-ERD-AE154JB	150k ohm	5%	¼W	carbon
R16, 17	RN-ERD-AE562JB	5.6k ohm	5%	¼W	carbon
R18, 19	RN-ERD-AE472JB	4.7k ohm	5%	¼W	carbon
R20	RN-ERD-AE122JB	1.2k ohm	5%	¼W	carbon
R21, 22	RN-ERD-AE183JB	18k ohm	5%	¼W	carbon
R23—26	RN-ERD-AE222JB	2.2k ohm	5%	¼W	carbon
R27	RN-ERD-AE473JB	47k ohm	5%	¼W	carbon
R28, 29, 40	RN-ERD-AE103JB	10k ohm	5%	¼W	carbon
R30, 31	RN-ERD-AE152JB	1.5k ohm	5%	¼W	carbon
R32, 33	RN-ERD-AE560JB	56 ohm	5%	¼W	carbon
R34	RN-ERC-AF821K	820 ohm	10%	½W	solid
R35, 41	RN-ERD-AE101JB	100 ohm	5%	¼W	carbon
R36	RN-ERD-AE221JB	220 ohm	5%	¼W	carbon
R37	RN-ERD-CC471JA	470 ohm	5%	⅛W	carbon
R38	RN-ERC-AF2R2K	2.2 ohm	10%	½W	solid
R39	RN-ERD-AE102JB	1k ohm	5%	¼W	carbon
R40	RN-ERD-CC103JA	10k ohm	5%	⅛W	carbon
R41	RN-ERD-AC101JA	100 ohm	5%	⅛W	carbon
R43	RN-ERD-AE561JB	560 ohm	5%	¼W	carbon

Symbol No.	Stock No.	Description
VARIABLE RESISTORS		
RV 2	RN-ERV-1N1-153A	20k ohm
RV 3	RN-ERV-2N4-1	10k ohm
SEMICONDUCTOR		
IC 2	RN-EIC-M51521L	Equalizer amp., linear-monolithic IC
IC 3, 4	RN-EIC-MB3730M	Power amp., linear-monolithic IC
IC 5, 6	RN-EID-DN6838	Tape end detector, digital monolithic IC
IC 7	RN-EID-AN6248	Auto reverse control, digital monolithic IC
Q 1, 2	RN-EVS-2SD655	Silicon transistor
Q 3	RN-EVS-2SC2594	Silicon transistor
Q 4	RN-EVS-2SB643-QR	Silicon transistor
D 1, 2, 5, 7, 11	RN-EDS-10E1	Silicon diode
D 3, 4	RN-EDP-LD-001GG	Light emitting diode
D 6, 10	RN-EDT-MZ309	Zener diode, 9V
D 8, 9	RN-EDS-1S1555	Silicon diode
COIL		
L 1	RN-ELL-1008	Choke, 1.8 mH
MISCELLANEOUS ELECTRICAL		
A 1	RN-EHM-C44-48	Playback head (LTM)
E 1	RN-EEM-1009B	Plunger solenoid
E 2	RN-EEM-1008A	Plunger solenoid
M 1	RN-EDM-1013	DC motor (includes motor pulley)
P 2	RN-EJU-S03V-562	3P connector
P 3	RN-EJU-S04V-563	4P connector
P 4	RN-EJU-S05V-564	5P connector
P 5	RN-EJU-S04V-575	4P connector
P 6	RN-EJU-S09V-381	9P connector
J 2	RN-EWJ-2342A	3P connector and lead assembly
J 3	RN-EWJ-2338	4P connector and lead assembly
J 4 (J 7)	RN-EWJ-2826	5P-9P connector and lead assembly
J 5	RN-EWJ-2340	4P connector and lead assembly
S 2	RN-ESB-2L2-162	Push switch LOUDNESS
S 3	RN-ESB-2N2-161	Push switch PROGRAM
S 4	RN-ESS-42-165	Slide switch
S 5	RN-ESL-1011B	Leaf switch
S 6	RN-ESM-1004	Micro switch
RY 1 (S 1)	RN-EED-1001	DC relay
	RN-EWJ-2337	Lead assembly
	RN-EWJ-2341A	Lead assembly
	RN-EWJ-2522	Lead assembly

Illus. No. (Fig. 10)	Stock No.	Description	Q'ty
MECHANICAL			
1	RN-MAD-1055B	Chassis, main	1
2	RN-MAD-1056	Chassis, top	1
3	RN-MHE-1108A	Holder	1
4	RN-MHE-1109B	Holder	1
5	RN-MYN-1027	Knob, BALANCE	1
6	RN-MYN-1024	Knob, VOL.	1
7	RN-MYD-1017	Knob, TONE	1
8	RN-MYB-1082	Button, PROGRAM	1
9	RN-MYB-1083	Button, LOUDNESS	1
10	RN-MYB-1084	Button, FF REW	2
11	RN-MYB-1085	Button, EJECT	1
12	RN-MDP-1121	Escutcheon	1
13	RN-MCV-1093A	Door	1
14	RN-MSI-162	Shaft, door	1
15	RN-MSC-1125	Spring, door	1
16	RN-MRE-1019	Radiator	1
17	RN-MCE-1017A	Clamp	1
18	RN-MCE-142	Clamp	1
19	RN-MCE-159	Clamp	2
20	RN-MHE-1083	Holder	1
21	RN-MPC-1223A	PC board EQUALIZER	1
22	RN-MPC-1141	PC board POWER AMP.	1
23	RN-MPM-2139A	PC board INDICATOR	1
24	RN-MPC-1142	PC board Line Filter	1
25	RN-MSE-98	Spacer	2
26	RN-MIP-1090	Insulator	1
	RN-MPC-1284	PC board Auto reverse	1
	RN-MPM-2133A	PC board Head	1
	RN-MPM-2119D	PC board Hole IC	1
	RN-MCF-21	Clamp	1
ASSEMBLY MATERIAL			
30	F6-SBD-3×6S	Screw, 3×6mm	5
31	F6-SBD-3×10S	Screw, 3×10mm	3
32	RN-MET-168	Special screw, 3×6mm	12
33	RN-MET-253	Special screw, 3×8mm	1
34	RN-MSN-1003	Nut, 9mm	1
35	RN-MEN-70	Special nut, 7mm	1

CASSETTE DECK (MDK-45/3A)

Illus. No. (Fig. 11)	Stock No.	Description	Q'ty
1	RN-MAS-1011F	Main-chassis	1
2	RN-MPM-2133A	PC board	1
3	RN-MET-233A	Special screw 2×6mm	1
4	RN-MST-133	Spacer	1
5	RN-MSC-1118	Spring	1
6	RN-MSC-1123	Spring	1
7	RN-MYT-1015D	Sub-chassis	1
8	RN-MSC-1119	Spring	1
9	RN-MHL-1016D	Holder	1
10	RN-MSC-1095	Spring	1
11	RN-MUL-1096C	Lever	1
12	RN-MPC-1284	PC board	1
13	RN-MUL-1094A	Lever	1
14	RN-MUL-1099B	Lever	1
15	RN-MRP-1035	Roller	2
16	RN-MUL-1098D	Lever	1
17	RN-MSC-1094	Spring	1
18	RN-MUL-1093B	Lever	1
19	RN-MSC-1089A	Spring	1
20	RN-MUL-1092	Lever	1
21	RN-MSC-1090A	Spring	1
22	RN-MUL-1104C	Lever	1
23	RN-MKS-1008B	Slip mechanism	2
24	RN-MKR-1010	Pinchroller assembly (L)	1
25	RN-MSC-1097A	Spring	1
26	RN-MUG-1057A	Gear	2
27	RN-MSC-252	Spring	2
28	RN-MUL-1100B	Lever	1
29	RN-MKS-1007B	Slip mechanism	1
30	RN-MUG-1039	Gear	1
31	RN-MUL-1095B	Lever	1
32	RN-MUL-1105C	Lever	1
33	RN-MKR-1009	Pinchroller assembly (R)	1
34	RN-MSC-1096A	Spring	1
35	RN-MUG-1038B	Gear	1
36	RN-MUG-1036	Gear	1
37	RN-MUG-1037B	Gear	1
38	RN-MUC-1003C	Cum	1
39	RN-MSC-1103A	Spring	2
40	RN-MUC-1002B	Cum	1
41	RN-MWP-1024	Washer	2
42	RN-MUC-1001C	Cum	1
43	RN-MSC-1101	Spring	2
44	RN-MSC-1092A	Spring	1
45	RN-MHG-1005A	Cassette loading mechanism (L)	1
46	RN-MRP-189	Roller	2
47	RN-MHG-1006A	Cassette loading mechanism (R)	1

Illus. No. (Fig. 11)	Stock No.	Description	Q'ty
48	RN-MUL-1122	Lever	1
49	RN-MSC-1091A	Spring	1
50	RN-MUL-1101	Lever	1
51	RN-MSC-1098A	Spring	1
52	RN-MUG-1035	Gear	1
53	RN-MUL-1097B	Lever	1
54	RN-MSC-1093	Spring	1
55	RN-MUL-1109	Lever	1
56	RN-MSC-1104	Spring	1
57	RN-MHL-1017C	Holder	1
58	RN-MUB-1017	Belt	1
59	RN-MUB-1016	Belt	1
60	RN-MRP-1059	Roller	3
61	RN-MUL-1115B	Lever	1
62	RN-MSC-1100A	Spring	2
63	RN-MUL-1117B	Lever	1
64	RN-MUL-1116B	Lever	1
65	RN-MPM-2119D	PC board	1
66	RN-MUL-1106D	Lever	1
67	RN-MSC-1105C	Spring	1
68	RN-MSC-1106C	Spring	1
69	RN-MUL-1107	Lever	1
70	RN-MSC-1107B	Spring	1
71	RN-MUL-1108	Lever	1
72	RN-MSC-1108C	Spring	1
73	RN-MUF-1007	Flywheel	2
74	RN-MHU-1024A	Holder	1
75	RN-MWS-110	Washer	1
76	RN-MHE-1090A	Holder	2
77	RN-MHU-1035A	Holder	1
ASSEMBLY MATERIAL			
80	RN-MWP-85	Washer	22
81	F6-ER-1.5	E-type ring, 1.5mm	31
82	F6-ER-2	E-type ring, 2mm	18
83	F6-ER-4	E-type ring, 4mm	1
84	RN-MHJ-2	E-type ring, 2mm	3
85	RN-MHJ-3	E-type ring, 3mm	2
86	RN-MWP-80A	Washer	2
87	RN-MWP-79	Washer	2
	F6-SBD-2.6×3S	Screw, 2.6×3mm	10
	RN-MET-1052	Special screw, 2.6×6mm	1
	F6-SBD-2.3×8S	Screw, 2.3×8mm	1
	F6-SBD-2×3S	Screw, 2×3mm	2
	F6-SBD-3×4S	Screw, 3×4mm	2
	F6-SNA-2×1.5S-M-N1	Screw, 2×1.5mm	4

NOTE: Specifications subject to change without prior notice.